Contents

How to Select the Globe Valve Retrofit Solution ..... pg 33
Globe Valve Retrofit Actuators ..... pg 34

Solutions for Specific Manufacturer and Part Number

Honeywell ..... pg 37
Johnson Controls ..... pg 46
Robertshaw ..... pg 63
Siebe - Invensys - Barber Colman ..... pg 64
Siemens - Landis - Powers ..... pg 75
Warren Controls ..... pg 81

Custom Globe Valve Solutions ..... pg 90
Custom Globe Valve Retrofit Solution Form..... pg 92
UGSP Series Globe Valve Retrofit Solution, Identification..... pg 94
UNV Retrofit Solution ..... pg 104
UNV Retrofit Installation Instructions ..... pg 105
NV Series Globe Valve Actuators..... pg 108
UGLK Retrofit, Components..... pg 122
Valve Accessories ..... pg 123
UGLK/UGSP Retrofit Solution..... pg 194

Globe Valves:

UNV Series Direct Coupled Actuator
2-way Valves
3-way Valves

UGLK Series Linkage Solution
2-way Valves
3-way Valves

Retrofit Solutions for Virtually any Valve Manufacturers:

Globe: Siemens, Johnson
Honeywell, Invensys
and more

Control: On/Off, Floating, 2-10 VDC
Multi-Function Technology®
Spring Return or
Non-Spring Return

M40045 - 10/10 - SUBJECT TO CHANGE. © BELIMO AIRCONTROLS (USA), INC.

SELF ADAPTING STROKE

The NV Series actuators, which are used with the UNV retrofit kits (Figure 1), are stroke adapting actuators. In modulating applications, the actuator will recognize the stroke length requirement and automatically adjust the control signal for maximum resolution.

RATINGS FOR STEAM APPLICATION

The UNV-035 is rated for 50 psi inlet steam. All other UNV solutions are rated for 15 psi inlet steam.

All UGLK linkages can be used with Belimo actuators up to a maximum of 50 psi steam

For other applications between 50 psi and 100 psi inlet steam, please call Belimo Customer Service for assistance

Figure 1

SPRING RETURN FUNCTION

When ordering a UNV kit with an NV Series spring return actuator, you must know the required spring return direction. The NVF24-MFT US springs to the UP position and the NVF24-MFT-E US springs to the DOWN position.

If the required spring return direction is not known, a UGLK linkage (Figure 2) and spring return actuator may be selected. The rotary actuators can be turned over on the linkage and produce a spring return function in either direction.

Figure 2

M40045 - 10/10 - SUBJECT TO CHANGE. © BELIMO AIRCONTROLS (USA), INC.

MAXIMUM DIMENSIONS – UNV with NV Series Actuators

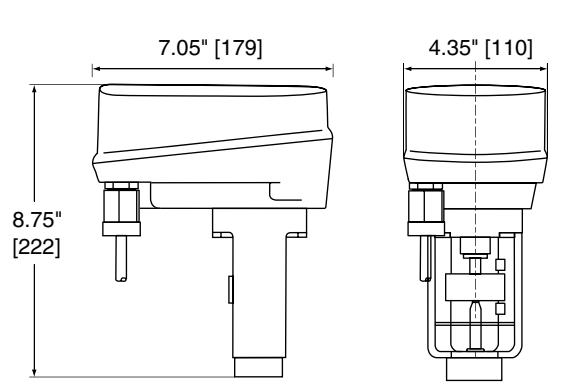

UNV-001 Dimensions in inches (numbers in brackets are metric)

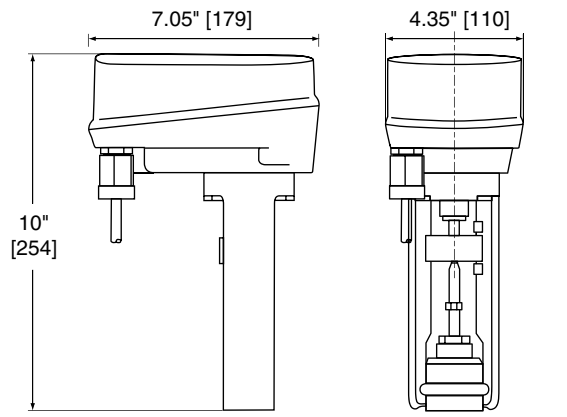

UNV-003-UNV-040 Dimensions in inches (numbers in brackets are metric)

MAXIMUM DIMENSIONS – UGLK Linkages with Rotary Actuators

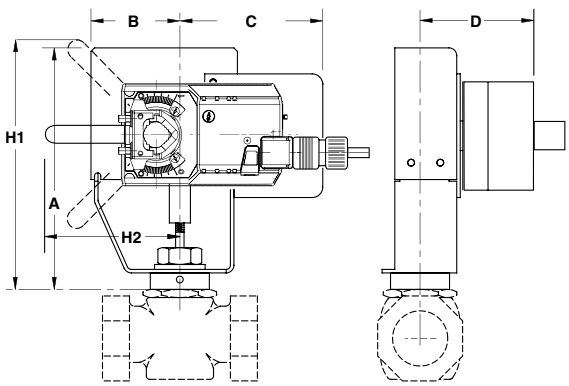

Linkages Taking 1 Actuator

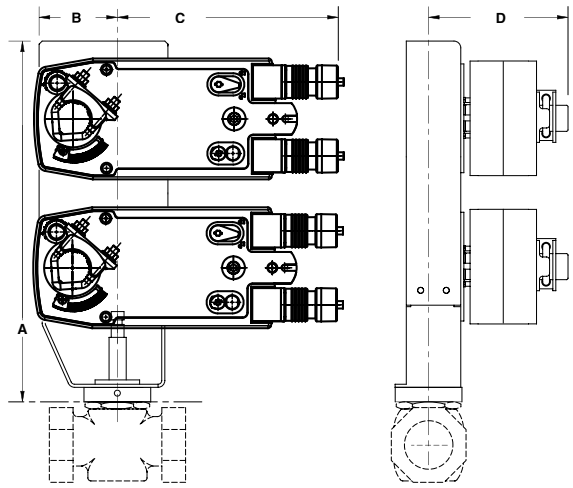

Linkages Taking 2 Actuators

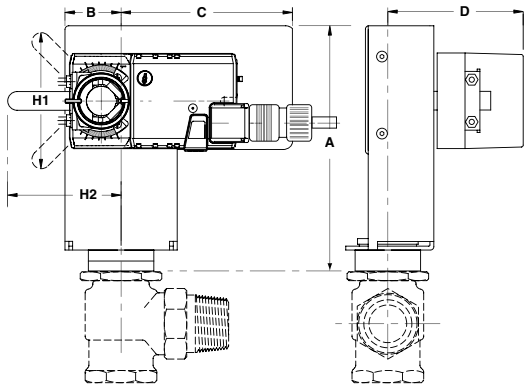

UGLK1150 and UGLK1550

MAXIMUM DIMENSIONS

Linkages Taking 1 Actuator			
A	7”-14” [356]	D	5” [127]
B	3” [76]	H1	9.5” [241]
C	9” [229]	H2	9.5”

Linkages Taking 2 Actuators			
A	19” [483]	D	5” [127]
B	3” [76]		
C	9” [229]		

UGLK1150 and UGLK1550			
A	6.5” [165]	D	4.0” [102]
B	1.5” [33]	H1	4.0” [102]
C	5.0” [127]	H2	3.5" [89]

M40045 - 10/10 - SUBJECT TO CHANGE. © BELIMO AIRCONTROLS (USA), INC.

BELIMO

How to select a Globe Valve Retrofit Solution

Follow the four steps listed below when ordering a globe valve retrofit kit.

Example: Siemens 658 series, **1¼"** valve, needing **90 psi** close-off pressure and **Spring Return** actuation.

1. Based on the **Valve Number, Configuration** and **Size**, select the proper linkage or linkages for your valve.

   Some valves will have more than one linkage, use the actuator selection guide to determine the appropriate linkage for a given application. The 658 Series valve uses linkage **UGLK1350** or **UGLK1214.**

2. Use the actuator selection guide and your close-off pressure requirement to select the correct actuator series for your application. Looking at the **UGLK1350** there are no spring return actuators that will achieve 90 psi close-off for 1¼" valve. Looking at the **UGLK1214**, the **NF** Series actuator will provide **156 psi close-off** for the **1¼" valve**.

3. Use the actuator listings to make your final actuator selection. Decide between **NFB24** and **NFB24-MFT.**

4. HOW TO ORDER: **Item 1 1pc UGLK1214**
   Item 2 1pc NFB24-MFT

5 YEAR WARRANTY

1 Select linkage solution based on the **Valve Number**, **Configuration**, and **Size**; select the proper **Linkage Solution** for your valve.

UGLK1214

Example: **Siemens Series #658, 2-Way, 1¼"** valve to be retrofitted.

Choose correct kit **UGLK1214**.

2 Verify close-off is suitable for application. Looking at the **UGLK1214**, the **NF** Series actuator will provide **156 psi close-off** for the **1¼" valve**.

3 Select actuator based on needed control type. Decide between **NFB24** and **NFB24-MFT**.

4 Complete Ordering Example:
Item 1: **UGLK1214**
Item 2: **NFB24-MFT**

EXAMPLE PAGE

Siemens\Landis\Powers

591, 599 and 658 Series Valves - NPT Bodies
Actuator Selection Guide

Valve Body Model	Valve Configuration	Size	Body Type	Flow	Failsafe	Close-Off psi	Close-Off psi (AFX Series)	Belimo Actuator Series (Sold Separately)	Belimo Linkage
658 Series	2-way	1"	NPT	N/a	No	120	(blank)	LM	UGLK1350
						229	(blank)	NV	UNV-004
						244	(blank)	NM	UGLK1350
						250	(blank)	AM	UGLK1214
								NVG	UNV-004
					Yes	95	(blank)	LF	UGLK1350
						183	(blank)	NVF	UNV-004
						244	(blank)	NF	UGLK1214
						250	(blank)	AF	UGLK1214
		1¼"	NPT	N/a	No	78	(blank)	LM	UGLK1350
						147	(blank)	NV	UNV-004
						156	(blank)	NM	UGLK1350
						235	(blank)	NVG	UNV-004
						250	(blank)	AM	UGLK1214
					Yes	61	(blank)	LF	UGLK1350
						117	(blank)	NVF	UNV-004
						156	(blank)	NF	UGLK1214
						231	250	AF	UGLK1214
	3-way	½"	NPT	N/a	No	250	(blank)	LM	UGLK1350
								AM	UGLK1214
								NV	UNV-004
					Yes	250	(blank)	LF	UGLK1350
								NF	UGLK1214
								NVF	UNV-004

Model		Spring Return Actuators							
		Control Input	Feedback	Power Supply	Running Time(s)		VA Rating	Auxiliary Switch	Cable Length
					Ⓜ	◎ ♦♦			
BASIC PRODUCTS									
NFB24		On/Off	-	24 VAC/DC	<75	20	8.5	-	3 ft.
NFB24-S		On/Off	-	24 VAC/DC	<75	20	8.5	Built-In	3 ft.
NFBUP		On/Off	-	24-240 VAC^{u}	<75	20	9.5	-	3 ft.
NFBUP-S		On/Off	-	24-240 VAC^{u}	<75	20	9.5	Built-In	3 ft.
NFB24-SR		2-10 VDC	2-10 VDC	24 VAC/DC	95	<20	6	-	3 ft.
NFB24-SR-S		2-10 VDC	2-10 VDC	24 VAC/DC	95	<20	6	Built-In	3 ft.
NFB24-MFT		2-10 VDC	2-10 VDC	24 VAC/DC	150	<20	9	-	3 ft.
NFB24-MFT-S		2-10 VDC	2-10 VDC	24 VAC/DC	150	<20	9	Built-In	3 ft.
CUSTOMIZE PRODUCTS	REORDER #								
NFX24	NF200 1A1 003**	On/Off	-	24 VAC/DC	<75	20	8.5	-	3 ft.
NFX24	NF200 1A3 003**	On/Off	-	24 VAC/DC	<75	20	8.5	-	10 ft.
NFX24-S	NF220 1A1 003**	On/Off	-	24 VAC/DC	<75	20	8.5	Built-In	3 ft.
NFX24-S	NF220 1A3 003**	On/Off	-	24 VAC/DC	<75	20	8.5	Built-In	10 ft.
NFXUP	NF000 1A1 003**	On/Off	-	24-240 VACu	<75	20	9.5	-	3 ft.
NFXUP	NF000 1A3 003**	On/Off	-	24-240 VACu	<75	20	9.5	-	10 ft.
NFXUP-S	NF000 1A1 003**	On/Off	-	24-240 VACu	<75	20	9.5	Built-In	3 ft.
NFXUP-S	NF000 1A3 003**	On/Off	-	24-240 VACu	<75	20	9.5	Built-In	10 ft.
NFX24-SR	NF400 1A1 H01**	2-10 VDC (4-20mA*)	2-10 VDC	24 VAC/DC	95	<20	6	-	3 ft.
NFX24-SR	NF400 1A3 H01**	2-10 VDC (4-20mA*)	2-10 VDC	24 VAC/DC	95	<20	6	-	10 ft.
NFX24-SR-S	NF420 1A1 H01**	2-10 VDC (4-20mA*)	2-10 VDC	24 VAC/DC	95	<20	6	Built-In	3 ft.

M40045 - 10/10 - SUBJECT TO CHANGE. © BELIMO AIRCONTROLS (USA), INC.

LINEAR ACTUATORS

SERIES	MODEL	Spring Return	Control Input	Feedback Position	Power Supply	Standard Running Time
NVF Series	NVF24-MFT US	spring UP	Variable with MFT (VDC, PWM, Floating Pt., On/Off)	variable VDC	24 VAC/DC	150 seconds
	NVF24-MFT-E US	spring DOWN	Variable with MFT (VDC, PWM, Floating Pt., On/Off)	variable VDC	24 VAC/DC	150 seconds
NV Series	NV24-3 US		Floating Pt., On/Off		24 VAC/DC	150 seconds
	NV24-MFT US		Variable with MFT (VDC, PWM, Floating Pt., On/Off)	variable VDC	24 VAC/DC	150 seconds
NVG Series	NVG24-MFT US		Variable with MFT (VDC, PWM, Floating Pt., On/Off)	variable VDC	24 VAC/DC	150 seconds

ROTARY ACTUATORS SUGGESTION

SERIES	MODEL	Spring Return	Electronic Fail Safe	Control Input	Feedback Position	Power Supply	Standard Running Time
LF Series*	LF24 US	•		24 VAC/DC		24 VAC/DC	Consult Specifications
	LF24-MFT US	•		Variable with MFT (VDC, PWM, Floating Pt., On/Off)	variable VDC	24 VAC/DC	
NF Series*	NFBUP-X1	•		24 VAC/DC		24 VAC/DC	
	NFX24-MFT-X1	•		Variable with MFT (VDC, PWM, Floating Pt., On/Off)	variable VDC	24 VAC/DC	
AF Series*	AF24 US, AFB24	•		24 VAC/DC		24 VAC/DC	
	AFX24-MFT-X1	•		Variable with MFT (VDC, PWM, Floating Pt., On/Off)	variable VDC	24 VAC/DC	
LM Series*	LMB24-3-X1			Floating Pt., On/Off		24 VAC/DC	
	LMX24-MFT-X1			Variable with MFT (VDC, PWM, Floating Pt., On/Off)	variable VDC	24 VAC/DC	
NM Series*	NMB24-3-X1			24 VAC/DC		24 VAC/DC	
	NMX24-MFT-X1			Variable with MFT (VDC, PWM, Floating Pt., On/Off)	variable VDC	24 VAC/DC	
AM Series*	AMB24-3-X1			24 VAC/DC		24 VAC/DC	
	AMX24-MFT-X1			Variable with MFT (VDC, PWM, Floating Pt., On/Off)	variable VDC	24 VAC/DC	
GM Series*	GMB24-3-X1			24 VAC/DC		24 VAC/DC	
	GMX24-MFT-X1			Variable with MFT (VDC, PWM, Floating Pt., On/Off)	variable VDC	24 VAC/DC	
GK Series*	GKB24-3-X1		•	24 VAC/DC		24 VAC/DC	
	GKX24-MFT-X1		•	Variable with MFT (VDC, PWM, Floating Pt., On/Off)	variable VDC	24 VAC/DC	

***Please consult the Damper sections for a full list of product offerings. Standard run times should be considered in the selection. All air side products are applicable for retrofit kits. Select "X1" actuators come with a handle.**

MULTI-FUNCTION TECHNOLOGY

	P-CODE					Control Input	Running Time	Built-in Feedback
NV CODES	V-10001	N01	ROTARY ACTUATOR CODES	P-10001	A01	2-10 VDC	150 seconds	**2-10 VDC**
	V-10002	N02		P-10002	A02	0-10 VDC	150 seconds	**0-10 VDC**
	V-10028	N1E		P-10028	A28	0-10 VDC	150 seconds	**0-10 VDC**
	V-10063	N1K		P-10063	A63	0.5-4.5 VDC	150 seconds	**0.5-4.5 VDC**
	V-10064	N1L		P-10064	A64	5.5-10 VDC	150 seconds	**5.5-10 VDC**
	V-20002	N1U		P-20002	W02	0.02-5.00 seconds PWM	150 seconds	**2-10 VDC**
	V-20003	N1V		P-20003	W03	0.10-25.5 seconds PWM	150 seconds	**2-10 VDC**
	V-30001	N24		P-30001	F01	Floating Pt.	150 seconds	**2-10 VDC**
	V-40002	N29		P-40002	J02	On/Off	150 seconds	**2-10 VDC**

Note: V-codes used for NV…Series actuator. All other MFT actuators use P-codes.

M40045 - 10/10 - SUBJECT TO CHANGE. © BELIMO AIRCONTROLS (USA), INC.

Valve Body Model	Valve Configuration	Size	Body Type	Flow	Failsafe	Close-Off psi	Close-Off psi (AFX Series)	Belimo Actuator Series (Sold Separately)	Belimo Linkage
V5011 Series	2-way	½”	NPT	-	No	250	-	NV	**UNV-006**
					Yes	250	-	NVF	**UNV-006**
		¾”	NPT	-	No	250	-	NV	**UNV-006**
					Yes	250	-	NVF	**UNV-006**
		1”	NPT	-	No	229	-	NV	**UNV-006**
						250	-	NVG	**UNV-006**
					Yes	183	-	NVF	**UNV-006**
		1¼”	NPT	-	No	147	-	NV	**UNV-006**
						235	-	NVG	**UNV-006**
					Yes	117	-	NVF	**UNV-006**
		1½”	NPT	-	No	102	-	NV	**UNV-006**
						160	-	NVG	**UNV-006**
					Yes	82	-	NVF	**UNV-006**
		2”	NPT	-	No	57	-	NV	**UNV-006**
						90	-	NVG	**UNV-006**
					Yes	46	-	NVF	**UNV-006**
		2½”	NPT	-	No	37	-	NV	**UNV-006**
						59	-	NVG	**UNV-006**
					Yes	29	-	NVF	**UNV-006**
		3”	NPT	-	No	25	-	NV	**UNV-006**
						41	-	NVG	**UNV-006**
					Yes	20	-	NVF	**UNV-006**
V5011N Series	2-way	½”	NPT	-	No	250	-	LM	**UGLK1806**
						250	-	NV	**UNV-006**
					Yes	250	-	LF	**UGLK1806**
						250	-	NF	**UGLK1800**
						250	-	NVF	**UNV-006**
		¾”	NPT	-	No	153	-	LM	**UGLK1806**
						250	-	NM	**UGLK1806**
						250	-	NV	**UNV-006**
					Yes	119	-	LF	**UGLK1806**
						250	-	NF	**UGLK1800**
						250	-	NVF	**UNV-006**
		1”	NPT	-	No	86	-	LM	**UGLK1806**
						173	-	NM	**UGLK1806**
						229	-	NV	**UNV-006**
						250	-	AM	**UGLK1800**
						250	-	NVG	**UNV-006**
					Yes	67	-	LF	**UGLK1806**
						173	-	NF	**UGLK1800**
						183	-	NVF	**UNV-006**
						250	250	AF	**UGLK1800**
		1¼”	NPT	-	No	55	-	LM	**UGLK1806**
						110	-	NM	**UGLK1806**
						147	-	NV	**UNV-006**
						221	-	AM	**UGLK1800**
						235	-	NVG	**UNV-006**
					Yes	43	-	LF	**UGLK1806**
						110	-	NF	**UGLK1800**
						117	-	NVF	**UNV-006**
						163	221	AF	**UGLK1800**
		1½”	NPT	-	No	38	-	LM	**UGLK1806**
						77	-	NM	**UGLK1806**
						102	-	NV	**UNV-006**
						153	-	AM	**UGLK1800**
						160	-	NVG	**UNV-006**
						250	-	GM	**UGLK1800**
					Yes	30	-	LF	**UGLK1806**
						77	-	NF	**UGLK1800**
						82	-	NVF	**UNV-006**
						113	153	AF	**UGLK1800**
						250	-	GK	**UGLK1800**

All close-off pressures listed are approximate and based on valve condition and application.

M40045 - 10/10 - Subject to change. © Belimo Aircontrols (USA), Inc.

Valve Body Model	Valve Configuration	Size	Body Type	Flow	Failsafe	Close-Off psi	Close-Off psi (AFX Series)	Belimo Actuator Series (Sold Separately)	Belimo Linkage
V5011N Series	2-way	2”	NPT	-	No	22	-	LM	**UGLK1806**
						43	-	NM	**UGLK1806**
						57	-	NV	**UNV-006**
						90	-	NVG	**UNV-006**
						86	-	AM	**UGLK1800**
						173	-	GM	**UGLK1800**
					Yes	17	-	LF	**UGLK1806**
						43	-	NF	**UGLK1800**
						64	86	AF	**UGLK1800**
						46	-	NVF	**UNV-006**
						173	-	GK	**UGLK1800**
V5013 Series	3-way	½”	NPT	-	No	250	-	NV	**UNV-006**
					Yes	250	-	NVF	**UNV-006**
		¾”	NPT	-	No	250	-	NV	**UNV-006**
					Yes	250	-	NVF	**UNV-006**
		1”	NPT	-	No	229	-	NV	**UNV-006**
						250	-	NVG	**UNV-006**
					Yes	183	-	NVF	**UNV-006**
		1¼”	NPT	-	No	147	-	NV	**UNV-006**
						235	-	NVG	**UNV-006**
					Yes	117	-	NVF	**UNV-006**
		1½”	NPT	-	No	102	-	NV	**UNV-006**
						160	-	NVG	**UNV-006**
					Yes	82	-	NVF	**UNV-006**
		2”	NPT	-	No	57	-	NV	**UNV-006**
						90	-	NVG	**UNV-006**
					Yes	46	-	NVF	**UNV-006**
		2½”	NPT	-	No	37	-	NV	**UNV-006**
						59	-	NVG	**UNV-006**
					Yes	29	-	NVF	**UNV-006**
		3”	NPT	-	No	25	-	NV	**UNV-006**
						41	-	NVG	**UNV-006**
					Yes	20	-	NVF	**UNV-006**

All close-off pressures listed are approximate and based on valve condition and application.

M40045 - 10/10 - Subject to change. © Belimo Aircontrols (USA), Inc.

Valve Body Model	Valve Configuration	Size	Body Type	Flow	Failsafe	Close-Off psi	Close-Off psi (AFX Series)	Belimo Actuator Series (Sold Separately)	Belimo Linkage
V5013N Series	3-way	½”	NPT	-	No	250	-	LM	**UGLK1806**
						250	-	NV	**UNV-006**
					Yes	250	-	LF	**UGLK1806**
						250	-	NF	**UGLK1800**
						250	-	NVF	**UNV-006**
		¾”	NPT	-	No	153	-	LM	**UGLK1806**
						250	-	NM	**UGLK1806**
						250	-	NV	**UNV-006**
					Yes	119	-	LF	**UGLK1806**
						250	-	NF	**UGLK1800**
						250	-	NVF	**UNV-006**
		1”	NPT	-	No	86	-	LM	**UGLK1806**
						173	-	NM	**UGLK1806**
						229	-	NV	**UNV-006**
						250	-	AM	**UGLK1800**
						250	-	NVG	**UNV-006**
					Yes	67	-	LF	**UGLK1806**
						173	-	NF	**UGLK1800**
						183	-	NVF	**UNV-006**
						250	250	AF	**UGLK1800**
		1¼”	NPT	-	No	55	-	LM	**UGLK1806**
						110	-	NM	**UGLK1806**
						147	-	NV	**UNV-006**
						221	-	AM	**UGLK1800**
						235	-	NVG	**UNV-006**
					Yes	43	-	LF	**UGLK1806**
						110	-	NF	**UGLK1800**
						117	-	NVF	**UNV-006**
						163	221	AF	**UGLK1800**
		1½”	NPT	-	No	38	-	LM	**UGLK1806**
						77	-	NM	**UGLK1806**
						102	-	NV	**UNV-006**
						153	-	AM	**UGLK1800**
						160	-	NVG	**UNV-006**
						250	-	GM	**UGLK1800**
					Yes	30	-	LF	**UGLK1806**
						77	-	NF	**UGLK1800**
						82	-	NVF	**UNV-006**
						113	153	AF	**UGLK1800**
						250	-	GK	**UGLK1800**
		2”	NPT	-	No	22	-	LM	**UGLK1806**
						43	-	NM	**UGLK1806**
						57	-	NV	**UNV-006**
						90	-	NVG	**UNV-006**
						86	-	AM	**UGLK1800**
						173	-	GM	**UGLK1800**
					Yes	17	-	LF	**UGLK1806**
						43	-	NF	**UGLK1800**
						64	86	AF	**UGLK1800**
						46	-	NVF	**UNV-006**
						173	-	GK	**UGLK1800**

All close-off pressures listed are approximate and based on valve condition and application.

M40045 - 10/10 - Subject to change. © Belimo Aircontrols (USA), Inc.

Valve Body Model	Valve Configuration	Size	Body Type	Flow	Failsafe	Close-Off psi	Close-Off psi (AFX Series)	Belimo Actuator Series (Sold Separately)	Belimo Linkage
V5011 (F1063, F1154, H1028, G1194)	2-way	1”	NPT	-	No	86	-	LM	**UGLK1806**
						173	-	NM	**UGLK1806**
						250	-	AM	**UGLK1800**
					Yes	67	-	LF	**UGLK1806**
						173	-	NF	**UGLK1800**
						250	250	AF	**UGLK1800**
V5011 (F1089, F1178, G1228)	2-way	1½”	NPT	-	No	38	-	LM	**UGLK1806**
						77	-	NM	**UGLK1806**
						153	-	AM	**UGLK1800**
						250	-	GM	**UGLK1800**
					Yes	30	-	LF	**UGLK1806**
						77	-	NF	**UGLK1800**
						113	153	AF	**UGLK1800**
						250	-	GK	**UGLK1800**
V5011 (F1097, F1188, G1103)	2-way	2”	NPT	-	No	22	-	LM	**UGLK1806**
						43	-	NM	**UGLK1806**
						86	-	AM	**UGLK1800**
						173	-	GM	**UGLK1800**
					Yes	17	-	LF	**UGLK1800**
						43	-	NF	**UGLK1806**
						64	86	AF	**UGLK1800**
						173	-	GK	**UGLK1800**
V5011 (H1028, G1194, J1023)	2-way	¾”	NPT	-	No	153	-	LM	**UGLK1806**
						250	-	NM	**UGLK1806**
					Yes	119	-	LF	**UGLK1806**
						250	-	NF	**UGLK1800**
V5011 (H1044, G1210, J1049)	2-way	1¼”	NPT	-	No	55	-	LM	**UGLK1806**
						110	-	NM	**UGLK1806**
						221	-	AM	**UGLK1800**
					Yes	43	-	LF	**UGLK1806**
						110	-	NF	**UGLK1800**
						163	221	AF	**UGLK1800**
V5011F (1014, 1022, 1030, 1048, 1121, 1139)	2-way	½”	NPT	-	No	250	-	LM	**UGLK1806**
					Yes	250	-	LF	**UGLK1806**
						250	-	NF	**UGLK1800**
V5011F (1055, 1147)	2-way	¾”	NPT	-	No	153	-	LM	**UGLK1806**
						250	-	NM	**UGLK1806**
					Yes	119	-	LF	**UGLK1806**
						250	-	NF	**UGLK1800**
V5011F (1071, 1162)	2-way	1¼”	NPT	-	No	55	-	LM	**UGLK1806**
						110	-	NM	**UGLK1806**
						221	-	AM	**UGLK1800**
					Yes	43	-	LF	**UGLK1806**
						110	-	NF	**UGLK1800**
						163	221	AF	**UGLK1800**
V5011G (1137, 1145, 1152, 1160, 1178, 1186)	2-way	½”	NPT	-	No	250	-	LM	**UGLK1806**
					Yes	250	-	LF	**UGLK1806**
						250	-	NF	**UGLK1800**
V5011H (1002, 1010)	2-way	½”	NPT	-	No	250	-	LM	**UGLK1806**
					Yes	250	-	LF	**UGLK1806**
						250	-	NF	**UGLK1800**
V5011J (1012, 1079)	2-way	½”	NPT	-	No	250	-	LM	**UGLK1806**
					Yes	250	-	LF	**UGLK1806**
						250	-	NF	**UGLK1800**
V5013F (1004, 1012, 1079)	3-way	½”	NPT	-	No	250	-	LM	**UGLK1806**
					Yes	250	-	LF	**UGLK1806**
						250	-	NF	**UGLK1800**
V5013F (1020, 1087)	3-way	¾”	NPT	-	No	153	-	LM	**UGLK1806**
						250	-	NM	**UGLK1806**
					Yes	119	-	LF	**UGLK1806**
						250	-	NF	**UGLK1800**

All close-off pressures listed are approximate and based on valve condition and application.

M40045 - 10/10 - Subject to change. © Belimo Aircontrols (USA), Inc.

Honeywell

V5013 and V5045 Series Valves - NPT Bodies

Linkage/Actuator Selection Guide

Valve Body Model	Valve Configuration	Size	Body Type	Flow	Failsafe	Close-Off psi	Close-Off psi (AFX Series)	Belimo Actuator Series (Sold Separately)	Belimo Linkage
V5013F (1038, 1095)	3-way	1”	NPT	-	No	86	-	LM	**UGLK1806**
						173	-	NM	**UGLK1806**
						250	-	AM	**UGLK1800**
					Yes	67	-	LF	**UGLK1806**
						173	-	NF	**UGLK1800**
						250	250	AF	**UGLK1800**
V5013F (1046, 1103)	3-way	1¼”	NPT	-	No	55	-	LM	**UGLK1806**
						110	-	NM	**UGLK1806**
						221	-	AM	**UGLK1800**
					Yes	43	-	LF	**UGLK1806**
						110	-	NF	**UGLK1800**
						163	221	AF	**UGLK1800**
V5013F (1053, 1111)	3-way	1½”	NPT	-	No	38	-	LM	**UGLK1806**
						77	-	NM	**UGLK1806**
						153	-	AM	**UGLK1800**
						250	-	GM	**UGLK1800**
					Yes	30	-	LF	**UGLK1806**
						77	-	NF	**UGLK1800**
						113	153	AF	**UGLK1800**
						250	-	GK	**UGLK1800**
V5013F (1061, 1129)	3-way	2”	NPT	-	No	22	-	LM	**UGLK1806**
						43	-	NM	**UGLK1806**
						86	-	AM	**UGLK1800**
						173	-	GM	**UGLK1800**
					Yes	17	-	LF	**UGLK1800**
						43	-	NF	**UGLK1806**
						64	86	AF	**UGLK1800**
						173	-	GK	**UGLK1800**
V5045	2-way	½”	NPT	-	No	250	-	AM	**UGLK1804**
					Yes	250	-	NF	**UGLK1804**
		¾”	NPT	-	Yes	250	-	NF	**UGLK1804**
		1”	NPT	-	No	250	-	AM	**UGLK1804**
					Yes	244	-	NF	**UGLK1804**
		1¼”	NPT	-	No	250	-	AM	**UGLK1804**
					Yes	156	-	NF	**UGLK1804**
		1½”	NPT	-	No	217	-	AM	**UGLK1804**
					Yes	161	217	AF	**UGLK1804**
		2”	NPT	-	No	122	-	AM	**UGLK1804**
					Yes	90	122	AF	**UGLK1804**

All close-off pressures listed are approximate and based on valve condition and application.

M40045 - 10/10 - Subject to change. © Belimo Aircontrols (USA), Inc.

Valve Body Model	Valve Configuration	Size	Body Type	Flow	Failsafe	Close-Off psi	Close-Off psi (AFX Series)	Belimo Actuator Series (Sold Separately)	Belimo Linkage
V3350 (A2009, A2017, B2007, C2013, D2003)	2-way	2½”	Flanged	-	No	55	-	AM	**UGLK1800**
						110	-	GM	**UGLK1800**
						196	-	2*GM	**UGLK1870**
					Yes	41	55	AF	**UGLK1800**
						82	110	2*AF	**UGLK1870**
						110	-	GK	**UGLK1800**
						196	-	2*GK	**UGLK1870**
V3350 (A3007, A3015, B3005, C3011, D3001)	2-way	3”	Flanged	-	No	38	-	AM	**UGLK1800**
						77	-	GM	**UGLK1800**
						136	-	2*GM	**UGLK1870**
					Yes	28	38	AF	**UGLK1800**
						57	77	2*AF	**UGLK1870**
						77	-	GK	**UGLK1800**
						136	-	2*GK	**UGLK1870**
V3350 (A4005, A4013, B4003, C4019, D4009)	2-way	4”	Flanged	-	No	11	-	AM	**UGLK1802**
						22	-	GM	**UGLK1802**
						40	-	2*GM	**UGLK1872**
					Yes	8	11	AF	**UGLK1802**
						16	22	2*AF	**UGLK1872**
						22	-	GK	**UGLK1802**
						40	-	2*GK	**UGLK1872**
V3350 (A5002, A5010, B5000, C5016, D5006)	2-way	5”	Flanged	-	No	14	-	GM	**UGLK1802**
						25	-	2*GM	**UGLK1872**
					Yes	5	7	AF	**UGLK1802**
						11	14	2*AF	**UGLK1872**
						14	-	GK	**UGLK1802**
						25	-	2*GK	**UGLK1872**
V3350 (A6000, A6008, A6018, C6014, D6004)	2-way	6”	Flanged	-	No	10	-	GM	**UGLK1802**
						18	-	2*GM	**UGLK1872**
					Yes	7	10	2*AF	**UGLK1872**
						10	-	GK	**UGLK1802**
						18	-	2*GK	**UGLK1872**
V3351 (A4004, C4000, C4001)	2-way	4”	Flanged	-	No	11	-	AM	**UGLK1802**
						22	-	GM	**UGLK1802**
						40	-	2*GM	**UGLK1872**
					Yes	8	11	AF	**UGLK1802**
						16	22	2*AF	**UGLK1872**
						22	-	GK	**UGLK1802**
						40	-	2*GK	**UGLK1872**
V3351 (A2008, C2005, D2002)	2-way	2½”	Flanged	-	No	55	-	AM	**UGLK1800**
						110	-	GM	**UGLK1800**
						196	-	2*GM	**UGLK1870**
					Yes	41	55	AF	**UGLK1800**
						82	110	2*AF	**UGLK1870**
						110	-	GK	**UGLK1800**
						196	-	2*GK	**UGLK1870**
V3351 (A3006, C3002, C3003)	2-way	3”	Flanged	-	No	38	-	AM	**UGLK1800**
						77	-	GM	**UGLK1800**
						136	-	2*GM	**UGLK1870**
					Yes	28	38	AF	**UGLK1800**
						57	77	2*AF	**UGLK1870**
						77	-	GK	**UGLK1800**
						136	-	2*GK	**UGLK1870**
V3351 (A5001, C5008, D5005)	2-way	5”	Flanged	-	No	14	-	GM	**UGLK1802**
						25	-	2*GM	**UGLK1872**
					Yes	5	7	AF	**UGLK1802**
						11	14	2*AF	**UGLK1872**
						14	-	GK	**UGLK1802**
						25	-	2*GK	**UGLK1872**
V3351 (A6009, C6005, C6006)	2-way	6”	Flanged	-	No	10	-	GM	**UGLK1802**
						18	-	2*GM	**UGLK1872**
					Yes	7	10	2*AF	**UGLK1872**
						10	-	GK	**UGLK1802**
						18	-	2*GK	**UGLK1872**

All close-off pressures listed are approximate and based on valve condition and application.

M40045 - 10/10 - Subject to change. © Belimo Aircontrols (USA), Inc.

Honeywell

V3360, V3450 Series Valves

Linkage/Actuator Selection Guide

Valve Body Model	Valve Configuration	Size	Body Type	Flow	Failsafe	Close-Off psi	Close-Off psi (AFX Series)	Belimo Actuator Series (Sold Separately)	Belimo Linkage
V3360E2008, V3361E2007	3-way	2½”	Flanged	-	No	55	-	AM	**UGLK1800**
						110	-	GM	**UGLK1800**
						196	-	2*GM	**UGLK1870**
					Yes	41	55	AF	**UGLK1800**
						82	110	2*AF	**UGLK1870**
						110	-	GK	**UGLK1800**
						196	-	2*GK	**UGLK1870**
V3360E3006, V3361E3005	3-way	3”	Flanged	-	No	38	-	AM	**UGLK1800**
						77	-	GM	**UGLK1800**
						136	-	2*GM	**UGLK1870**
					Yes	28	38	AF	**UGLK1800**
						57	77	2*AF	**UGLK1870**
						77	-	GK	**UGLK1800**
						136	-	2*GK	**UGLK1870**
V3360E4004, V3361E4003	3-way	4”	Flanged	-	No	11	-	AM	**UGLK1802**
						22	-	GM	**UGLK1802**
						40	-	2*GM	**UGLK1872**
					Yes	8	11	AF	**UGLK1802**
						16	22	2*AF	**UGLK1872**
						22	-	GK	**UGLK1802**
						40	-	2*GK	**UGLK1872**
V3360E5001, V3361E5000	3-way	5”	Flanged	-	No	14	-	GM	**UGLK1802**
						25	-	2*GM	**UGLK1872**
					Yes	5	7	AF	**UGLK1802**
						11	14	2*AF	**UGLK1872**
						14	-	GK	**UGLK1802**
						25	-	2*GK	**UGLK1872**
V3360E6009, V3361E6008	3-way	6”	Flanged	-	No	10	-	GM	**UGLK1802**
						18	-	2*GM	**UGLK1872**
					Yes	7	10	2*AF	**UGLK1872**
						10	-	GK	**UGLK1802**
						18	-	2*GK	**UGLK1872**
V3450 (A2008, A2016, B2006, C2012, D2002)	2-way	2½”	Flanged	-	No	55	-	AM	**UGLK1800**
						110	-	GM	**UGLK1800**
						196	-	2*GM	**UGLK1870**
					Yes	41	55	AF	**UGLK1800**
						82	110	2*AF	**UGLK1870**
						110	-	GK	**UGLK1800**
						196	-	2*GK	**UGLK1870**
V3450 (A3006, A3014, B3004, C3010, D3000)	2-way	3”	Flanged	-	No	38	-	AM	**UGLK1800**
						77	-	GM	**UGLK1800**
						136	-	2*GM	**UGLK1870**
					Yes	28	38	AF	**UGLK1800**
						57	77	2*AF	**UGLK1870**
						77	-	GK	**UGLK1800**
						136	-	2*GK	**UGLK1870**
V3450 (A4004, A4012, B4002, C4018, D4008)	2-way	4”	Flanged	-	No	11	-	AM	**UGLK1802**
						22	-	GM	**UGLK1802**
						40	-	2*GM	**UGLK1872**
					Yes	8	11	AF	**UGLK1802**
						16	22	2*AF	**UGLK1872**
						22	-	GK	**UGLK1802**
						40	-	2*GK	**UGLK1872**
V3450 (A5001, A5019, B5009, C5015, D5005)	2-way	5”	Flanged	-	No	14	-	GM	**UGLK1802**
						25	-	2*GM	**UGLK1872**
					Yes	5	7	AF	**UGLK1802**
						11	14	2*AF	**UGLK1872**
						14	-	GK	**UGLK1802**
						25	-	2*GK	**UGLK1872**
V3450 (A6009, A6007, A6017, C6013, D6003)	2-way	6”	Flanged	-	No	10	-	GM	**UGLK1802**
						18	-	2*GM	**UGLK1872**
					Yes	7	10	2*AF	**UGLK1872**
						10	-	GK	**UGLK1802**
						18	-	2*GK	**UGLK1872**

All close-off pressures listed are approximate and based on valve condition and application.

M40045 - 10/10 - Subject to change. © Belimo Aircontrols (USA), Inc.

Valve Body Model	Valve Configuration	Size	Body Type	Flow	Failsafe	Close-Off psi	Close-Off psi (AFX Series)	Belimo Actuator Series (Sold Separately)	Belimo Linkage
V3451 (A2007, C2003, C2004)	2-way	2½”	Flanged	-	No	55	-	AM	**UGLK1800**
						110	-	GM	**UGLK1800**
						196	-	2*GM	**UGLK1870**
					Yes	41	55	AF	**UGLK1800**
						82	110	2*AF	**UGLK1870**
						110	-	GK	**UGLK1800**
						196	-	2*GK	**UGLK1870**
V3451 (A3005, C3001, C3002)	2-way	3”	Flanged	-	No	38	-	AM	**UGLK1800**
						77	-	GM	**UGLK1800**
						136	-	2*GM	**UGLK1870**
					Yes	28	38	AF	**UGLK1800**
						57	77	2*AF	**UGLK1870**
						77	-	GK	**UGLK1800**
						136	-	2*GK	**UGLK1870**
V3451 (A4003, C4000, C4009)	2-way	4”	Flanged	-	No	11	-	AM	**UGLK1802**
						22	-	GM	**UGLK1802**
						40	-	2*GM	**UGLK1872**
					Yes	8	11	AF	**UGLK1802**
						16	22	2*AF	**UGLK1872**
						22	-	GK	**UGLK1802**
						40	-	2*GK	**UGLK1872**
V3451 (A5000, C5006, C5007)	2-way	5”	Flanged	-	No	14	-	GM	**UGLK1802**
						25	-	2*GM	**UGLK1872**
					Yes	5	7	AF	**UGLK1802**
						11	14	2*AF	**UGLK1872**
						14	-	GK	**UGLK1802**
						25	-	2*GK	**UGLK1872**
V3451 (A6008, C6004, C6005)	2-way	6”	Flanged	-	No	10	-	GM	**UGLK1802**
						18	-	2*GM	**UGLK1872**
					Yes	7	10	2*AF	**UGLK1872**
						10	-	GK	**UGLK1802**
						18	-	2*GK	**UGLK1872**
V3460E2007, V3461E2006	3-way	2½”	Flanged	-	No	55	-	AM	**UGLK1800**
						110	-	GM	**UGLK1800**
						196	-	2*GM	**UGLK1870**
					Yes	41	55	AF	**UGLK1800**
						82	110	2*AF	**UGLK1870**
						110	-	GK	**UGLK1800**
						196	-	2*GK	**UGLK1870**
V3460E3005, V3461E3004	3-way	3”	Flanged	-	No	38	-	AM	**UGLK1800**
						77	-	GM	**UGLK1800**
						136	-	2*GM	**UGLK1870**
					Yes	28	38	AF	**UGLK1800**
						57	77	2*AF	**UGLK1870**
						77	-	GK	**UGLK1800**
						136	-	2*GK	**UGLK1870**
V3460E4003, V3461E4002	3-way	4”	Flanged	-	Yes	8	11	AF	**UGLK1802**
						22	-	GK	**UGLK1802**
						16	22	2*AF	**UGLK1872**
						40	-	2*GK	**UGLK1872**
					No	11	-	AM	**UGLK1802**
						22	-	GM	**UGLK1802**
						40	-	2*GM	**UGLK1872**
V3460E5000, V3461E5009	3-way	5”	Flanged	-	No	14	-	GM	**UGLK1802**
						25	-	2*GM	**UGLK1872**
					Yes	5	7	AF	**UGLK1802**
						11	14	2*AF	**UGLK1872**
						14	-	GK	**UGLK1802**
						25	-	2*GK	**UGLK1872**
V3460E6008, V3461E6007	3-way	6”	Flanged	-	No	10	-	GM	**UGLK1802**
						18	-	2*GM	**UGLK1872**
					Yes	7	10	2*AF	**UGLK1872**
						10	-	GK	**UGLK1802**
						18	-	2*GK	**UGLK1872**

All close-off pressures listed are approximate and based on valve condition and application.

M40045 - 10/10 - Subject to change. © Belimo Aircontrols (USA), Inc.

Honeywell

V5011, V5013 Series Valves

Linkage/Actuator Selection Guide

Valve Body Model	Valve Configuration	Size	Body Type	Flow	Failsafe	Close-Off psi	Close-Off psi (AFX Series)	Belimo Actuator Series (Sold Separately)	Belimo Linkage
V5011 (A1734, F1105, F1196, G1111)	2-way	2½”	Flanged/NPT	-	No	55	-	AM	**UGLK1800**
						110	-	GM	**UGLK1800**
						196	-	2*GM	**UGLK1870**
					Yes	41	55	AF	**UGLK1800**
						82	110	2*AF	**UGLK1870**
						110	-	GK	**UGLK1800**
						196	-	2*GK	**UGLK1870**
V5011 (A1767, F1113, F1204, G1129)	2-way	3”	Flanged/NPT	-	No	38	-	AM	**UGLK1800**
						77	-	GM	**UGLK1800**
						136	-	2*GM	**UGLK1870**
					Yes	28	38	AF	**UGLK1800**
						57	77	2*AF	**UGLK1870**
						77	-	GK	**UGLK1800**
						136	-	2*GK	**UGLK1870**
V5011 (A1858, B1013)	2-way	4”	Flanged	-	No	11	-	AM	**UGLK1802**
						22	-	GM	**UGLK1802**
						40	-	2*GM	**UGLK1872**
					Yes	8	11	AF	**UGLK1802**
						16	22	2*AF	**UGLK1872**
						22	-	GK	**UGLK1802**
						40	-	2*GK	**UGLK1872**
V5011 (A1882, B1047)	2-way	5”	Flanged	-	No	14	-	GM	**UGLK1802**
						25	-	2*GM	**UGLK1872**
					Yes	5	7	AF	**UGLK1802**
						11	14	2*AF	**UGLK1872**
						14	-	GK	**UGLK1802**
						25	-	2*GK	**UGLK1872**
V5011 (A1916, B1078)	2-way	6”	Flanged	-	No	10	-	GM	**UGLK1802**
						18	-	2*GM	**UGLK1872**
					Yes	7	10	2*AF	**UGLK1872**
						10	-	GK	**UGLK1802**
						18	-	2*GK	**UGLK1872**
V5013 (B1003, C1001)	3-way	2½”	Flanged	-	No	55	-	AM	**UGLK1800**
						110	-	GM	**UGLK1800**
						196	-	2*GM	**UGLK1870**
					Yes	41	55	AF	**UGLK1800**
						82	110	2*AF	**UGLK1870**
						110	-	GK	**UGLK1800**
						196	-	2*GK	**UGLK1870**
V5013 (B1011, C1019)	2-way	3”	Flanged	-	No	38	-	AM	**UGLK1800**
						77	-	GM	**UGLK1800**
						136	-	2*GM	**UGLK1870**
					Yes	28	38	AF	**UGLK1800**
						57	77	2*AF	**UGLK1870**
						77	-	GK	**UGLK1800**
						136	-	2*GK	**UGLK1870**
V5013 (B1029, C1027)	3-way	4”	Flanged	-	No	11	-	AM	**UGLK1802**
						22	-	GM	**UGLK1802**
						40	-	2*GM	**UGLK1872**
					Yes	8	11	AF	**UGLK1802**
						16	22	2*AF	**UGLK1872**
						22	-	GK	**UGLK1802**
						40	-	2*GK	**UGLK1872**
V5013 (B1037, C1035)	3-way	5”	Flanged	-	No	14	-	GM	**UGLK1802**
						25	-	2*GM	**UGLK1872**
					Yes	5	7	AF	**UGLK1802**
						11	14	2*AF	**UGLK1872**
						14	-	GK	**UGLK1802**
						25	-	2*GK	**UGLK1872**
V5013 (B1045, C1043)	3-way	6”	Flanged	-	No	10	-	GM	**UGLK1802**
						18	-	2*GM	**UGLK1872**
					Yes	7	10	2*AF	**UGLK1872**
						10	-	GK	**UGLK1802**
						18	-	2*GK	**UGLK1872**

All close-off pressures listed are approximate and based on valve condition and application.

M40045 - 10/10 - Subject to change. © Belimo Aircontrols (USA), Inc.

Assembly Sequence for Existing Valves

The valve should be stripped down to its basic form, as shown. Note that there are no threads on the bonnet. The packing nut is smaller that the diameter of the bonnet. There is a groove in the bonnet used to secure the retrofit collar to the valve.

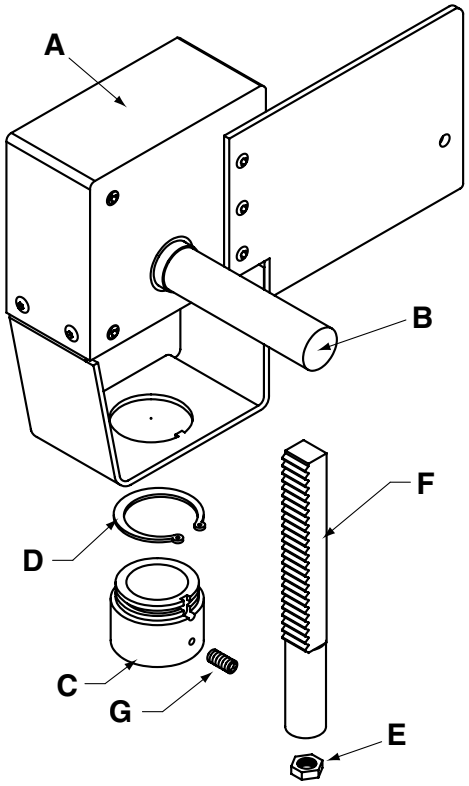

Follow these steps to properly assemble STYLE 5 type globe valves to the retrofit linkage. Reference the step-by-step photos to help guide you through the assembly process.

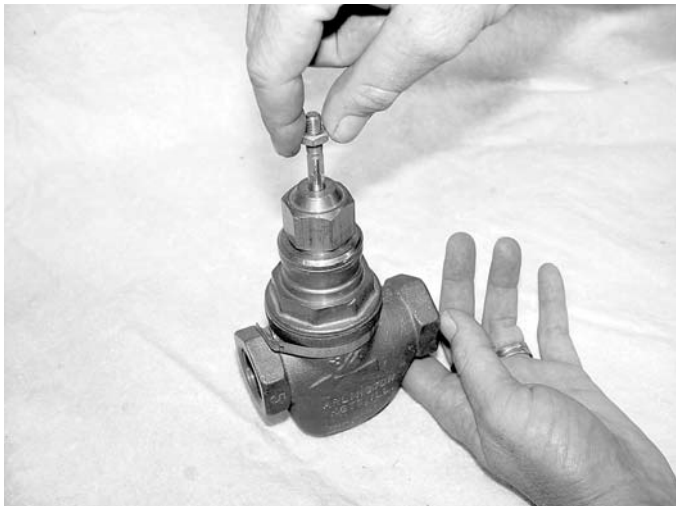

STEP 1) Assemble the supplied stem nut **(E)** to the valve stem, and thread at least 10 - 12 turns down onto the stem.

STEP 2) Attach the rack assembly **(F)**, which may or may not include an extension or adapter, onto the valve stem. Thread the assembly as far down onto the valve stem as possible, until you contact the previously attached valve stem nut.

M40045 - 10/10 - SUBJECT TO CHANGE. © BELIMO AIRCONTROLS (USA), INC.

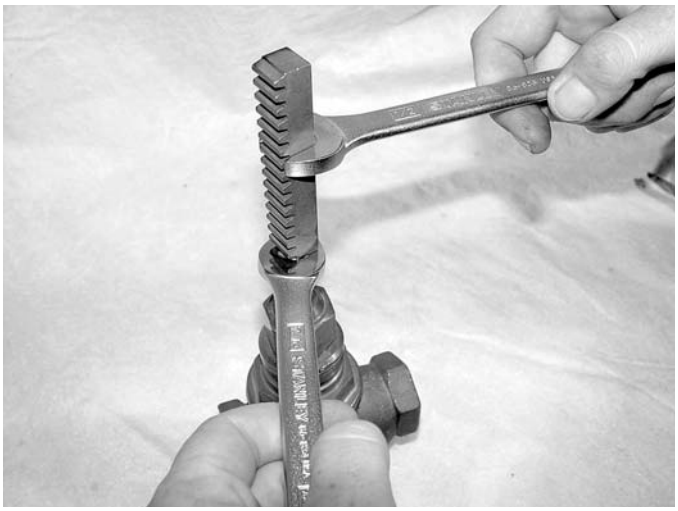

STEP 3) Use a 1/2" open end wrench, and an additional open end wrench sized to match the valve stem nut **(E)**, to tighten the rack assembly **(F)** to the valve stem. Use the 1/2" open end wrench to attach to the smooth back side of the rack, opposite the teeth. This will prevent damage to the rack teeth during the tightening sequence.

STEP 4) Slide the gearbox **(A)** assembly over the rack and down onto the valve bonnet nut. Note that the rack teeth must point TOWARDS the linkage drive shaft **(B)**, and that the rack enters a small square hole in the bottom of the gearbox when aligned properly. It may be necessary to loosen the setscrew **(G)** in the linkage collar **(C)** before it will seat fully onto the valve bonnet.

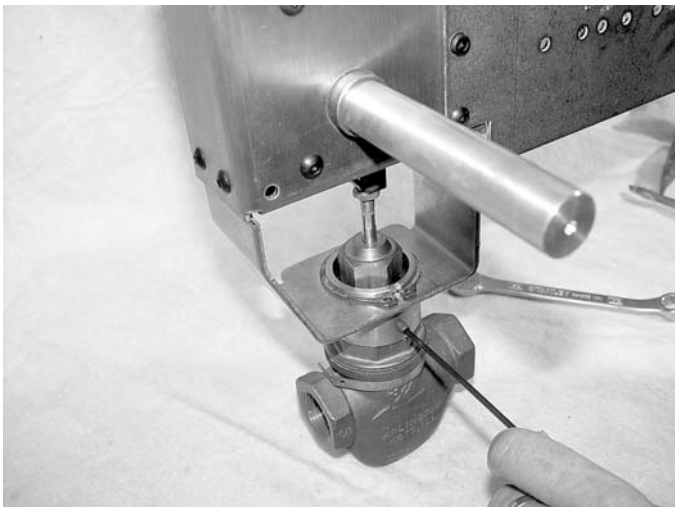

STEP 5) Once the linkage is fully seated on the valve bonnet, tighten setscrew **(G)** in the collar to affix the linkage onto the valve.

STEP 6) Check for full stem travel by turning the linkage drive shaft **(B)** fully clockwise (CW) and counter clockwise (CCW) until you feel the valve seat or hit travel limit stops in both directions. The shaft should turn freely without binding.

STEP 7) Turn the linkage drive shaft fully CW, and attach the actuator. This will position the linkage in the stem down position. Lightly snug up on the actuator's shaft clamp nuts. Turn the actuator CCW until you feel resistance due to the valve reaching end of travel. Notice the distance between the actuator's current position and the actuator's end of travel @ fully CCW. Loosen the actuator shaft clamp nuts, and rotate the actuator ONE-HALF the distance to its full CCW travel. Tighten the actuator's shaft clamp nuts securely. This procedure balances the valve travel limits within the range of motion of the actuator, thereby assuring unimpeded valve stem travel. When using an AF or NF actuator, a 5° offset may be necessary to ensure proper close off.

M40045 - 10/10 - SUBJECT TO CHANGE. © BELIMO AIRCONTROLS (USA), INC.

UGLK Collars			Most Commonly Used Valve Type				
Part Number	**Inside Diameter**	**Description**	**Type 1**	**Type 2**	**Type 3**	**Type 4**	**Type 5**
UGLK-COL-1005	1.000”	3 setscrews, for frame type		•			
UGLK-COL-1063	1.063”	3 setscrews, for frame type		•			
UGLK-COL-1100	1.100”	3 setscrews, for frame type, counterbored top				•	
UGLK-COL-1255	1.250”	3 setscrews, for frame type		•			
UGLK-COL-1315	1.315”	3 setscrews, for frame type, can be used with VB7 with shim			•		
UGLK-COL-1375	1.375”	3 setscrews, for frame type		•			
UGLK-COL-BC10	1.250”- 16 Thd.	Fits Siebe VB7/VB9. Use on frame type only	•				
UGLK-COL-HY02	1.375”	1 setscrew, for frame type					•
UGLK-COL-LG02	1.740”	1 setscrew, for frame type			•		
UGLK-COL-LG04	1.740”	1 setscrew, for frame type			•		
UGLK-COL-JC05	1.070”	3 setscrews, for frame type		•			
UGLK-COL-JC06	1.562- 14 Thd.	Threaded, brass		•			
UGLK-COL-JC08	0.760”	3 setscrews, for frame type, counterbored top				•	
UGLK-COL-JC15	1.070”	Ring, no setscrews		•			
UGLK-COL-0880	0.880”	3 setscrews, for frame type, counterbored top				•	
UGLK-COL-WNUT	1.375”- 20 Thd.	Replacement Warren nut. Will not go over damaged threads		•			
UGLK-COL-AD01	1.250”- 16 Thd.	Fits Siebe VB7/VB9. For VB7 frame only	•				
UGLK-COL-UNIV	Custom	3 setscrews, for frame type. Must be machined		•	•	•	•

UGLK Stem Adapters			Most Commonly Used Valve Type				
Part Number	**Inside Diameter**	**Description**	**Type 1**	**Type 2**	**Type 3**	**Type 4**	**Type 5**
UGLK-STM-1800	1/4”- 28 Stem Thd.		•	•	•	•	•
UGLK-STM-1801	3/8”- 24 Stem Thd.		•	•	•	•	•
UGLK-STM-1802	1/2”- 20 Stem Thd.		•			•	•
UGLK-STM-1803	7/16”- 20 Stem Thd.						•
UGLK-STM-1501	3/8”- 24 Stem Thd.	For Warren FLG valves with UGLK		•			
UGLK-STM-1805	3/8” OD Grooved	Landis 2.5-3” -599 Series			•		
UGLK-STM-2305	1/2” OD Grooved	Landis 4-6” -599 Series			•		
UGLK-STM-UNIV	Custom	Must be machined	•	•	•	•	•

UGLK Stem Adapters

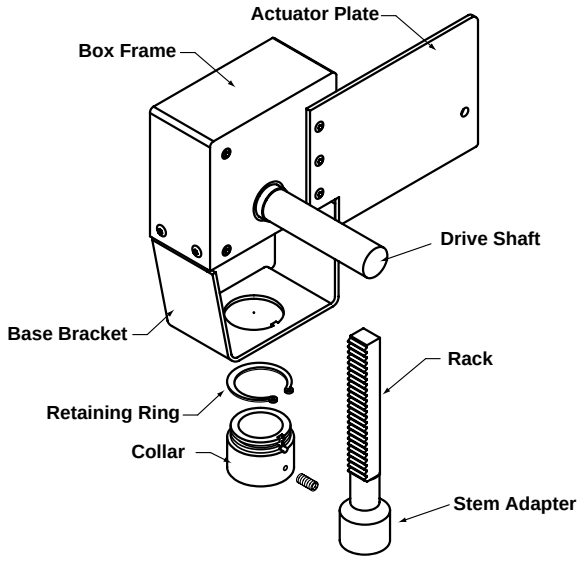

UGLK Collars

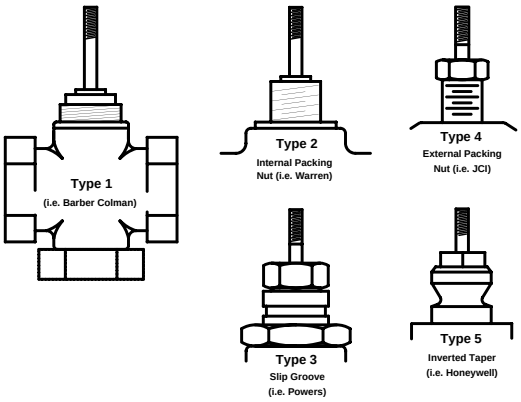

M40045 - 10/10 - SUBJECT TO CHANGE. © BELIMO AIRCONTROLS (USA), INC.